Pantera Electronics Console Switch Controller Installation Manual

Win/Brake Version

READ THIS FIRST, that means before making any wiring changes to your Pantera.

Instead of just briefly looking at this installation manual, take the time to read it. These written instructions will provide the installation details that just looking at pictures will not provide.

Most mistakes that are made are a result of not following directions and not reading the installation manual BEFORE applying electrical power to the electronics. Many times damage to the electronic controller requires extensive repair or replacing entirely. The cost of extensive repair or replacing is not economical and can approach doubling the original cost of installation.

Important to note:

After installation, make sure the battery is at full charge before testing the Console Switch Controller. In order for the Console Switch Controller power window control to function properly the battery voltage should be at maximum or the engine running to keep the battery charged during testing.

Features and Benefits

> Provides "Express" window functions, one press to go *full down*, or an additional press to stop in any mid-position, another press to continue *down*. The same is true for up, one press to go *full up*, or an additional press to stop in any mid-position, another press to continue *up*. The motor current is continuously monitored and stops the window automatically from interfering objects or window mechanism travel stops. Electronic damping of the window switch contacts ignore fast multiple presses from rough road.

> Provides 3 user adjustable pre-set fan speeds, 2 speeds by the original fan switch, 1 speed activation when the A/C is turn on. There is a 10 second delay timer for blower activation to allow maximum current for engine starting.

> Converts the original courtesy light and additional interior lights to "Theater" or progressive brightness lighting. Opening either door will slowly ramp the lighting from off to full brightness and maintains interior lighting after doors are closed for a fixed time. After 1 minute time is terminated the lighting slowly ramps from full bright to off. Activation of the driving lights terminates the timer promptly. On-board terminals for additional interior lighting that have grounded sockets for simple one wire per light installation. Outputs for lighting in excess of 5 amps, and is compatible with incandescent and LED lighting devices.

> Simple installation, direct connection from the harness to the Console Switch Controller with on board wire color labels. The number of wires from the Console Switch Controller to the console switches is reduced electronically.

> Compact design fits behind the console and improves serviceability by fewer and longer wires from the Console Switch Controller to the console switches

> Diagnostic on-board LED indicators: switch operation, window motor over-current and power ready.

> Keep originality by transparent operation through original Pantera switches and hidden installation.

> Each of the 3 sections, power windows, fan control and courtesy lights are all powered independently, so if one opens a fuse the other sections continue to function.

If you have or installed the Air Conditioner Controller (ACC) note:

The ACC provides an improved control connection for the CSC Automatic Blower Speed. Instead of connecting the CSC to the thermostat switch behind the dash, connect the CSC to the tab on the ACC labeled "CSC-WHT/BLK". This is much easier to connect to and provides longer cycles that the blower is "ON" in the "Auto-Speed" operation.

Note: From this point to the end of this document "CSC" will refer to the Console Switch Controller.

Additional things you will need:

In the "Electrical Installation Phase" below, note the terminals and wire required for the installation. Those are not included with the CSC, but can be purchased at most automotive stores and hardware suppliers. A crimping tool will be needed to crimp the connectors. Decide the location and method for the CSC and purchase the fasteners for mounting. Read through the Electrical Installation Phase to determine the wire size (AWG) and color. The wire colors listed match the wire colors used in the harness, but other colors can be substituted. The CSC utilizes 0.25" quick disconnect tabs, the same style as used on the Pantera. Common quick disconnect crimp terminals are compatible with the CSC and are available in 2 wire size range, 22-18 AWG (red) smaller size and 16-14 AWG (blue) larger size, both of these can be purchased at automotive and hardware stores. On pages 10 and 11 there is reference to "terminal links" you will need to them to easily add the wires for the CSC.

Mechanical Installation Phase:

Mounting of the CSC is at the discretion of the owner, there are (4)1/8 holes in the corners of the CSC for wire ties. In the example images, wire tie wraps are used to mount the CSC on a A/C hose in the 1972 Pantera.

***CAUTION* -->** Factory windshields are notorious for water leaks. The water collects in the gasket relief and slowly drips from the inside of the gasket area and falls vertically. If this water contacts the CSC it will cause failure of the electronics and may cause the CSC to operate in a erratic unpredictable manor including damage to the power window motor.
Seal all leaks and verify that water cannot contact the CSC in the selected mounting location.

Electrical Installation Phase:

Disconnect the Battery by removing the negative or ground cable from the battery terminal

Note: That switches other than de Tomaso switches were used as replacement switches in some Panteras. Commonly a Bosch switch may be installed which is electrically different than the de Tomaso switch. A diagram for wiring Bosch switches is on page 13. [Image 4]

Moving Fan Switch Wires to the CSC [Use image 1]

Disconnect the BROWN wire from the Fan switch terminal 4, connect to CSC terminal BROWN (FUSE#10).

Disconnect the RED or ORANGE wire from the Fan switch terminal 8. This wire will need an extension. Check the fan motor wire determine if a male or female quick disconnect terminal will mate, and crimp to a 12 AWG wire.

Disconnect the factory resistor wires, the resistor is NOT used with the CSC. Removing the resistor is optional. The CSC terminal labeled “RED or ORANGE” only connects to the single motor wire that exists from the black motor housing.

Plan the distance to the CSC, make the wire long enough and crimp a female quick disconnect to the other end and connect to CSC terminal labeled RED or ORANGE.

Disconnect the WHITE/BLACK stripe wire from the Fan switch terminal 1, connect to CSC terminal FAN-LITE, WHT/BLK.

Moving Passenger Window Switch Wires to the CSC [Use image 2]

Disconnect the BLACK wire from the passenger window switch terminal, connect to CSC terminal PASS-BLK (WIN-MTR).

Disconnect the YELLOW wire from the passenger window switch terminal, connect to CSC terminal PASS-YLW (FUSE#14).

Disconnect the WHITE/BLACK wire from the passenger window switch terminal, connect to CSC terminal WHT/BLK (GND).

Disconnect the BROWN wire from the passenger window switch terminal, connect to CSC terminal PASS-BRN (WIN-MTR)

Moving Driver Window Switch Wires to the CSC [Use image 2]

Disconnect the BLACK wire from the driver window switch terminal, connect to CSC terminal DRV-BLK (WIN-MTR)

Disconnect the PINK/BLACK wire from the driver window switch terminal, connect to CSC terminal PINK/BLK (FUSE#13)

Disconnect the WHITE/BLACK wire from the driver window switch terminal, connect to CSC terminal WHT/BLK (GND)

Disconnect the RED wire from the driver window switch terminal, connect to CSC terminal DRV-RED (WIN-MTR)

ADD a BLACK 12 AWG wire from the tab labeled BLACK (GND) to a chassis connection free of paint and rust. The tab is located next to the tab labeled DRV-RED (WIN-MTR). Use a screw and ring terminal to make the connection.

Moving Courtesy Light Switch Wires to the CSC [Use image 1]

Disconnect the VIOLET (or WHITE/BLK) wire from the courtesy switch terminal 2, connect to CSC terminal VIOLET-CRTSY.

Disconnect the ***pair*** of VIOLET wires from the courtesy switch terminal 1, connect to CSC terminal DR-SW (VIOLET)

Disconnect the VIOLET/BLACK wire from Fuse #8, typically this powers the radio, connect to CSC terminal VIOLET/BLK (FUSE#8)
(1 of 2 terminals)

Connect a VIOLET/BLACK wire to the CSC terminal VIOLET/BLK (1 of 2 terminals) to whatever it was connected to before removal, usually it's the radio.

Construct and connect ground jumper for the switches
[Use image 6]

Construct a ground jumper to connect chassis ground to the Fan switch, Power Window switches and the Courtesy Light switch.

Make 3 lengths of black wire 20 AWG, 3 ½" long and crimp (4) blue female quick disconnects on the ends.

Install the ground jumper to the Fan Switch terminal 4, Driver Power Window Switch terminal -31, Passenger Power Window Switch terminal -31 and Courtesy Light Switch terminal 3. There is a convenient ground wire (BLACK) that was originally connected to the Courtesy Light Switch on terminal 3 use that as the ground to chassis wire.

Construct a harness for the switches [Use image 5]

Determine where you want to mount the CSC based on position that the length of the original harness wires allow. Decide how far you would like to remove the console switch/gauge plate for service. The total distance is how long the switch harness will be. A length of 16 inches seems to be adequate since the other gauge wires limit the console switch/gauge plate. 20 AWG wire size is adequate and red quick disconnects can be used.
In [Image 3] the wires are paired by function and twisted together, note that a RED and BLACK wire pair for the drivers window switch, BROWN and BLACK wire pair for the passenger window switch, a GREY and GREEN pair for the fan switch. The single VIOLET wire is for the courtesy switch. *(note a blue wire was added for the "extra" switch to power a GPS system)*

Connecting the harness to the CSC [Use image 2]

The quick disconnects tabs have a label and location on the CSC board.

1 pair of wires from the drivers window switch.

Label: **DR/UP-RED**, this means, driver window switch UP direction, RED wire.
Label: **DR/DWN-BLK**, this means, driver window switch DOWN direction, BLACK wire.

1 pair of wires from the passenger window switch.

Label: **PAS/UP-BRN**, this means, passenger window switch UP direction, BROWN wire.
Label: **PAS/DN-BLK**, this means, passenger window switch DOWN direction, BLACK wire.

1 pair of wires from the Heater and A/C blower

Label: **FAN/SW-LOW**, this means, fan switch, GREY wire. (low speed)
Label: **FAN/SW-HIGH**, this means, fan switch, GREEN wire. (high speed)

CRTSY-SW
Label: **VIOLET**, this means, courtesy light switch, VIOLET wire.
This is the single wire from the courtesy switch.

Label: **VIOLET/BLK,** extra power for radio or GPS switch. (Blue wire)
See page 16, image 8.

Connecting Other Wires to the CSC [Use image 1]

Automatic Fan Speed: The wire for sensing when the A/C is activated is connected from the rotary A/C switch at the WHITE/BLACK wire. Remove the WHITE/BLACK wire from the A/C switch and add a quick disconnect link and a WHITE wire (20 AWG) with a red quick disconnect terminal. Replace the wire assembly on the same switch terminal.
Route the WHITE wire from the A/C switch to the CSC and add a red quick disconnect terminal to the wire, connect the terminal to AUTO-SPEED (WHT/BLK) tab on the CSC board.

If you want the "Low Speed" for use with the heater setting, then a switch must be added instead of using the A/C thermostat switch for activation. This can be any small switch since it only needs to support very low current, these can be bought locally at a auto supply store or Radio Shack. One terminal on the switch is connected to a +12 volt source such as the pink wires used on the gauges. Use a link to add another quick disconnect terminal to any pink wire on the gauges and connect to the switch. Then connect the other terminal on the switch to the tab on the CSC labeled WHT/BLK.

Courtesy Lights: When driving the car at night it is desirable to shorten the timer for dimming the courtesy lights, a connection to the instrument light gauge is used to accomplish this. Add a YELLOW wire from any one of the gauge lights that has a YELLOW/BLACK wire by using a quick disconnect link or by cutting off the original factory quick disconnect terminal and putting 2 wires in a male blue quick disconnect and connect to the gauge light terminal. The other end of the wire connects to GAUGE-LIT (YELLOW/BLK) tab on the CSC board.

Adding Courtesy Lights: A number of courtesy lights can be added either incandescent or LED types by connecting one wire to the CSC board and chassis ground. Install a courtesy light, connect one wire to chassis ground, usually this is a BLACK wire from the light housing. Crimp the other courtesy light wire to a length of BLUE wire and crimp a quick disconnect to the other end of the BLUE wire and connect to either CRTSY-LIT tabs on the CSC board. Several courtesy lights can be added to both CRTSY-LIT tabs on the board and more than one wire can be added to blue quick disconnect terminals as well.

Very Important:

The window motor lift mechanism is assumed to be operating correctly and the motor gearbox has been up-graded with the brass gear replacement, cleaned and lubricated. The window regulator bearing points have been cleaned, lubricated and rust removed. This maintenance is a must for proper operation with the CSC. Over loading the motor will cause the automatic current sensing to shut off the motor if the proper maintenance is not preformed. (See image set 9 for details)

Use a current meter to measure the motor current after improving the window regulator. As a reference motor current for window "DOWN" is 5 to 6 amps and 10 to 11 amps maximum for window "UP"

Power-up Test :

Note: The LED status indicators are located relative to the associated terminal for that function. See [Image 12]

1. Re-connect negative or ground cable battery.

2. Turn on ignition switch, GREEN WIN-PWR indicator should be illuminated for the power window section of the CSC.

3. Momentarily press the driver power window switch, note that the GREEN indicator illuminates for window DOWN and YELLOW LED for window UP. It is important to observe the RED indicator labeled OVRCRT-DR flashes at the end of travel. This indicates that the window motor has been automatically turned off. If this is not observed then turn off the ignition immediately and check wiring, window regulator and window motor for proper operation. If the window only moves in small increments and the OVRCRT-DR flashes without complete travel then check window regulator for a mechanically binding condition.

4. Momentarily press the passenger power window switch, note that the GREEN LED illuminates for window DOWN and YELLOW LED for window UP. It is important to observe the RED indicator labeled OVRCRT-PAS flashes at the end of travel. This indicates that the window motor has been automatically turned off. If this is not observed then turn off the ignition immediately and check wiring, window regulator and window motor for proper operation. If the window only moves in small increments and the OVRCRT-PAS flashes without complete travel then check window regulator for a mechanically binding condition. (See [Image set 9] for details)

5. Turn on ignition switch, GREEN FAN-RDY indicator in the fan section will illuminated after 12 seconds. This allows maximum battery current for starting the engine. Note that the fan will NOT operate until the GREEN FAN-RDY indicator is illuminated. Note that the fan switch can be left in any position and the fan will start automatically after the 12 second delay.

6. Test fan switch by moving to the low or mid position, note that the AMBER indicator illuminates and the fan motor operates. The speed of the fan can be adjusted by rotating the black round control on the CSC board near the indicator that is illuminated.

7. Test fan switch by moving to the high or further right position, note that the BLUE indicator illuminates and the fan motor operates. The speed of the fan can be adjusted by rotating the black round control on the CSC board near the indicator that is illuminated.

8. Turn off the fan switch, test the AUTO-SPEED fan by turning on the A/C thermostat to maximum cold position, note that the YELLOW indicator illuminates and the fan motor operates. The speed of the fan can be adjusted by rotating the black round control on the CSC board near the indicator that is illuminated.
The AUTO-SPEED will be disabled by moving the fan switch on either the low or high position, the AMBER or BLUE indicators will illuminate and the YELLOW indicator will be off.

9. At any fan speed, check the amber indicator in the speedometer, it should be illuminated. Note that the AMBER indicator will be different brightness depending on the speed of the blower, this operation different than the original factory operation.

10. After both doors are closed and the courtesy switch off for 1 minute, notice that the GREEN LITE-PWR indicator is not illuminated, this saves electrical power even though the CSC is ready to detect either door opening. When a door is opened the courtesy lighting section of the CSC is powered and the GREEN LITE-PWR indicator is illuminated until the lighting cycle is completed and automatically returns to power-save mode.

11. With either car door open the AMBER DR-SW indicator should be illuminated, the courtesy lights should ramp up to maximum brightness. Close both doors, the courtesy lights should stay illuminated for about 1 minute and then ramp down in brightness to off.
With both doors closed, turn on the courtesy switch, the YELLOW CRTSY-SW indicator should be illuminated, the courtesy lights should ramp up to maximum brightness. Turn off the courtesy switch the courtesy lights should stay illuminated for about 1 minute and then ramp down in brightness to off.

Note: Some LED replacements for incandescent blubs may not dim or ramp up and down in intensity. This is due to the design of the LED power supply internal to the LED bulb, this will cause an on/off type operation.

Moving Fan Motor and Courtesy Switch Wires Image 1

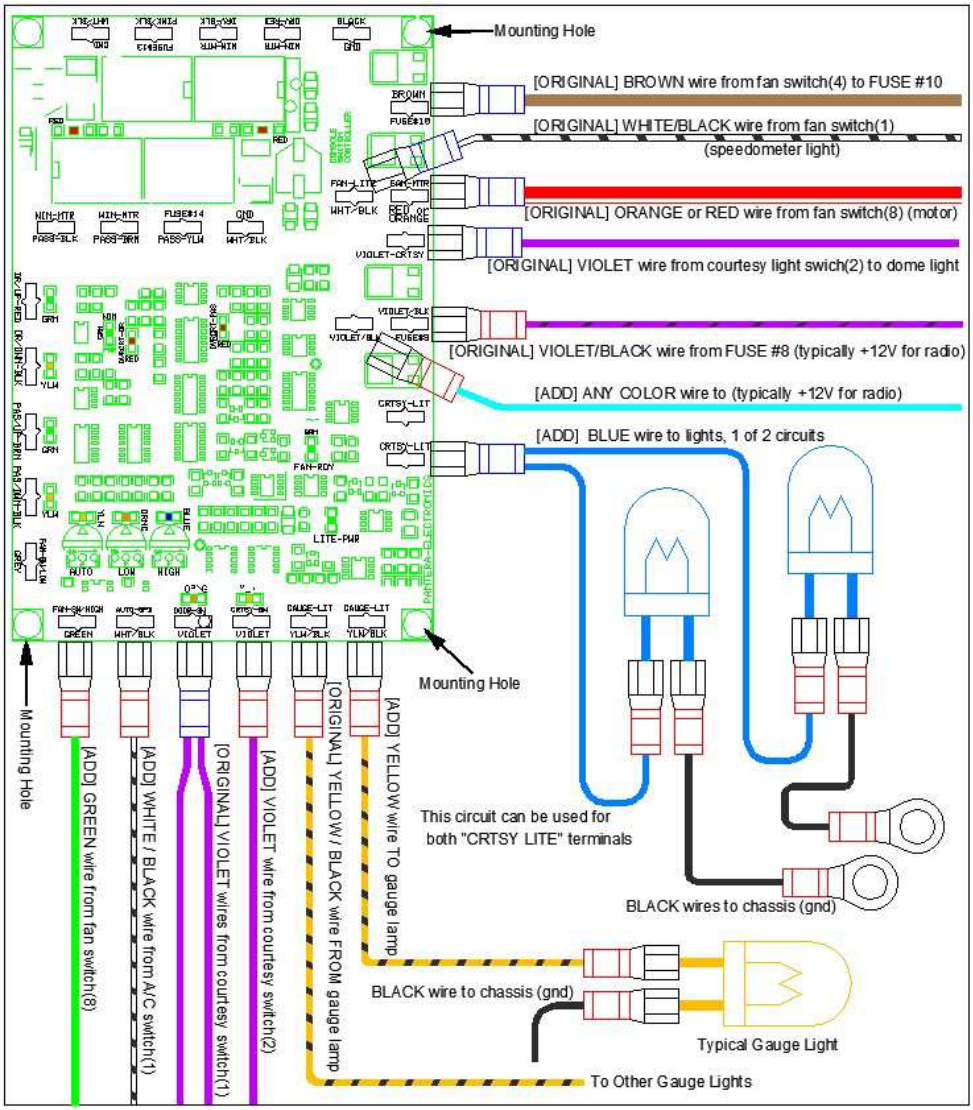

Drivers and Passengers Power Window Wiring Modifications Image 2

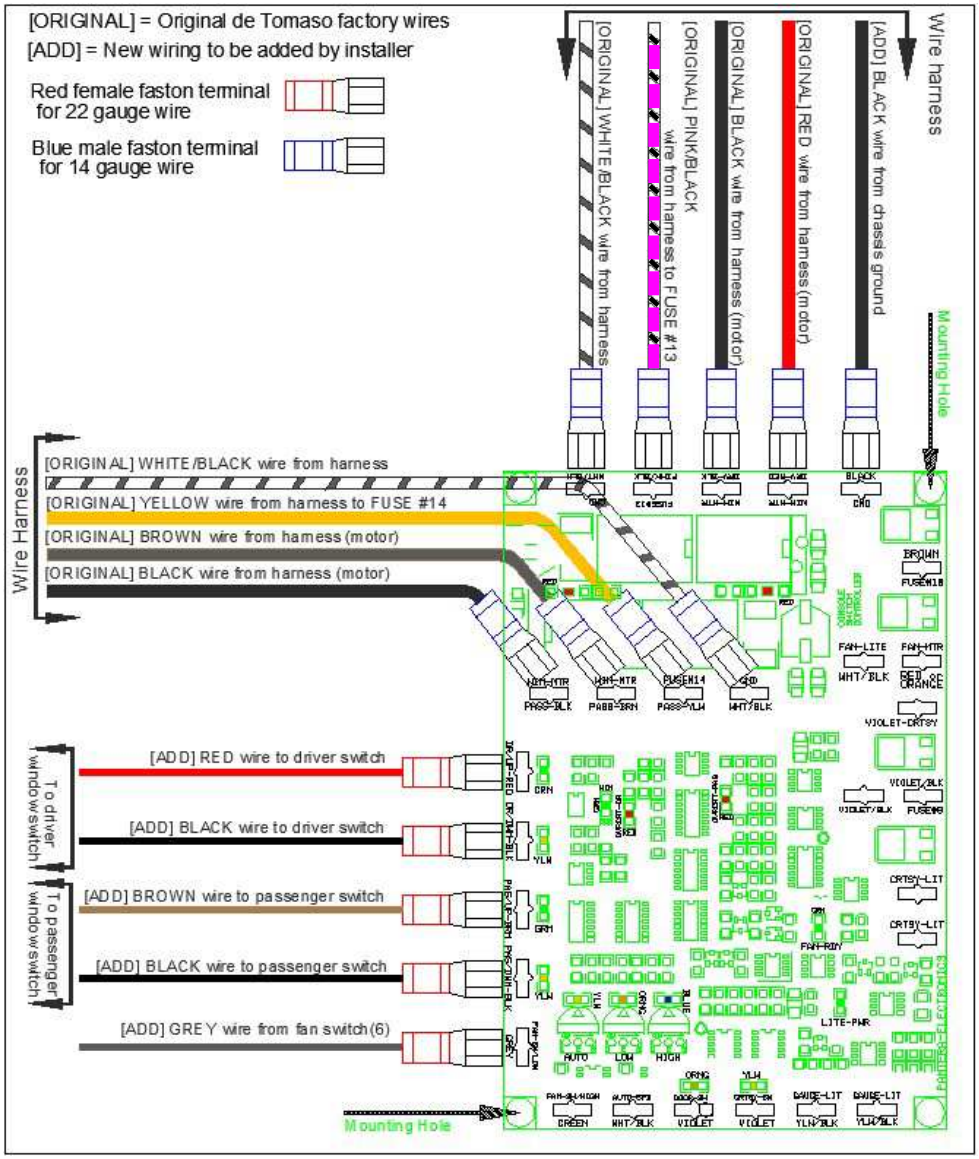

de Tomaso Switch, note all switches viewed from back side. Image 3

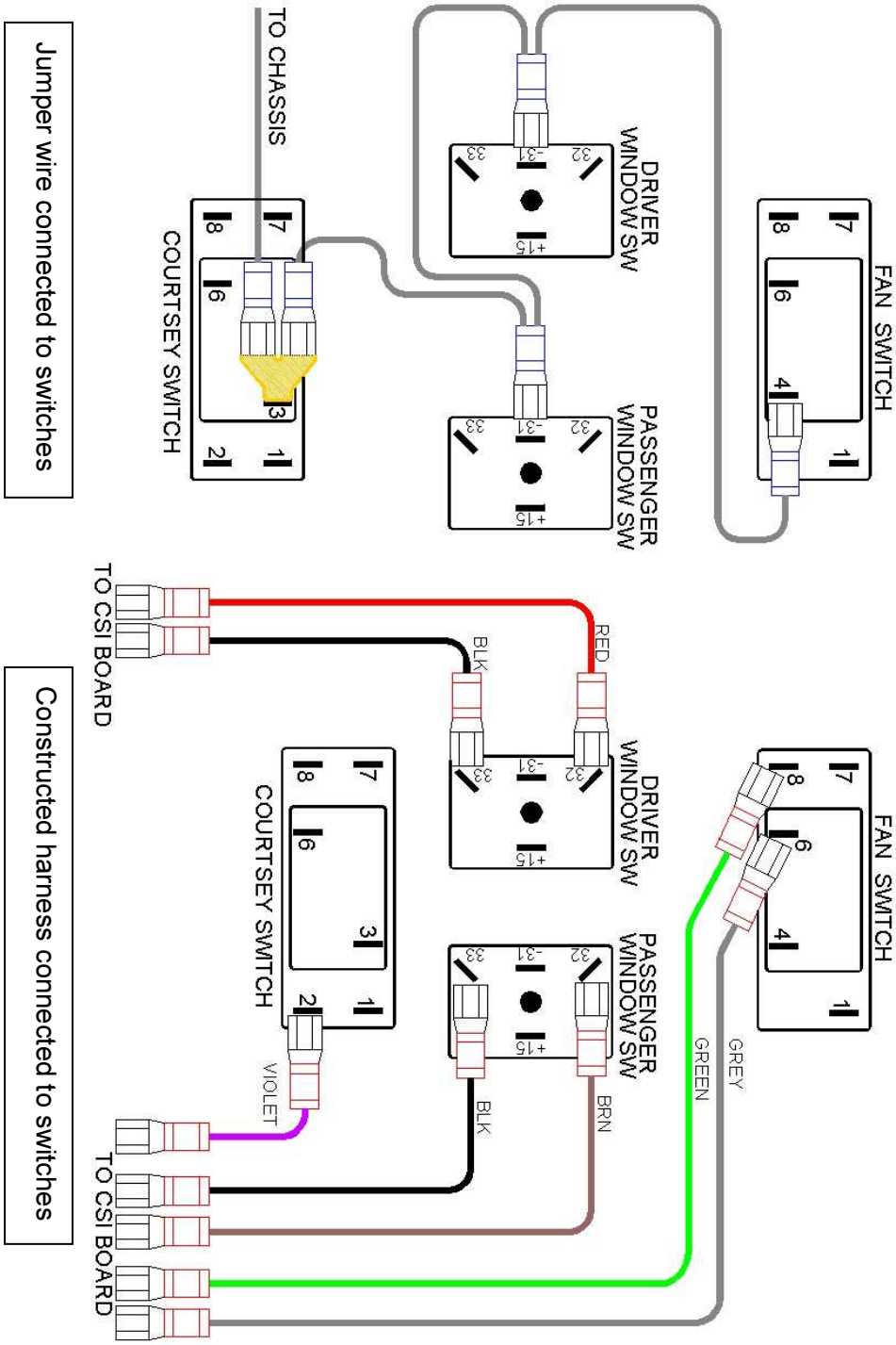

Jumper wire connected to switches

Constructed harness connected to switches

Bosch Switch, note all switches viewed from back side. Image 4

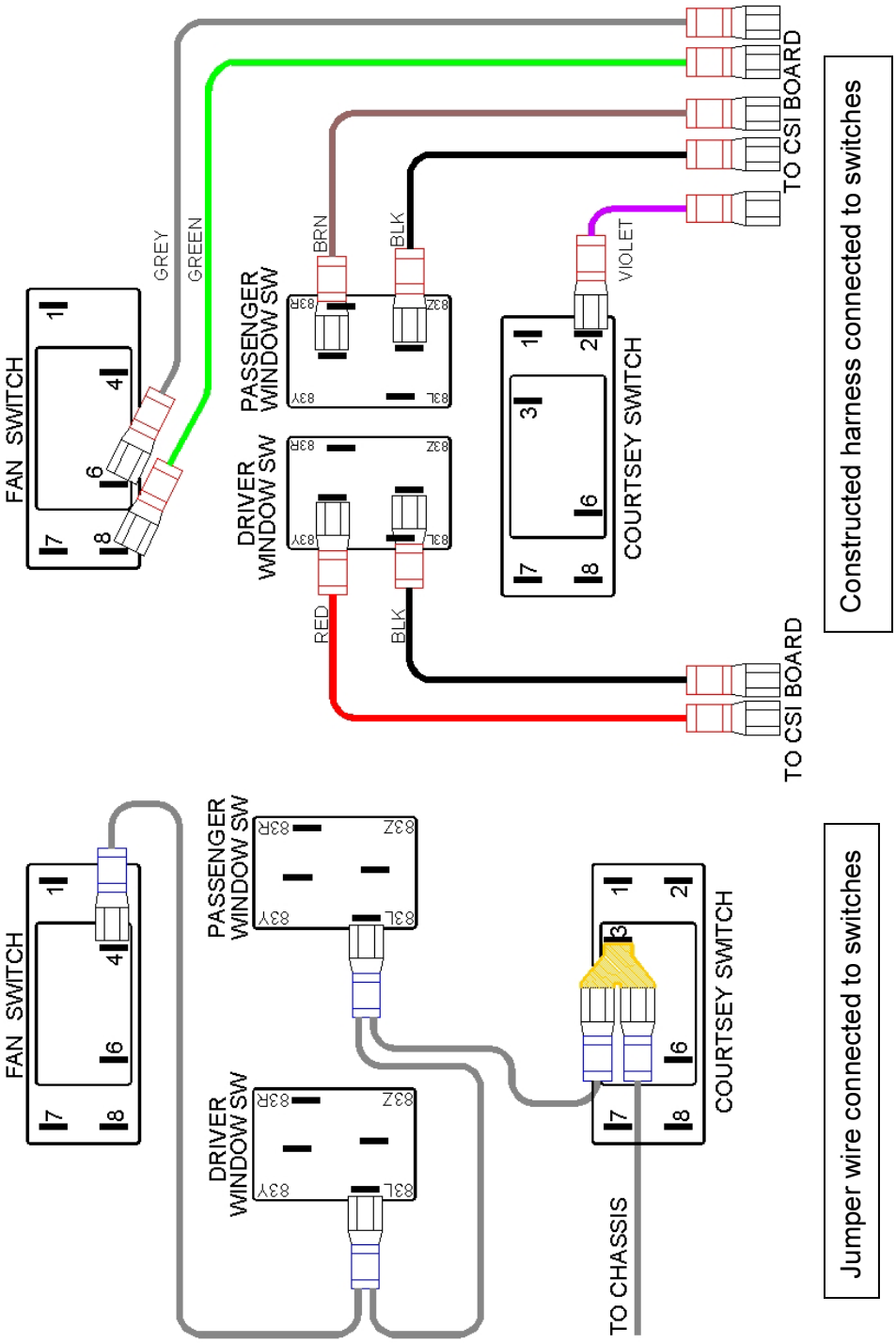

Constructed Harness Image 5

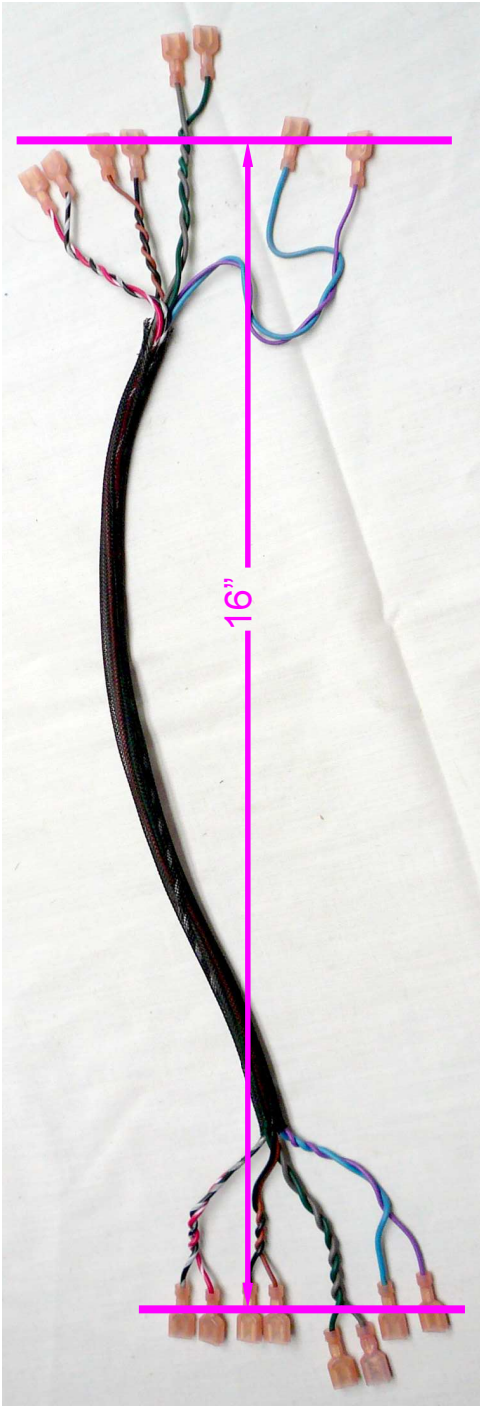

Ground Jumper with Terminals Image 6

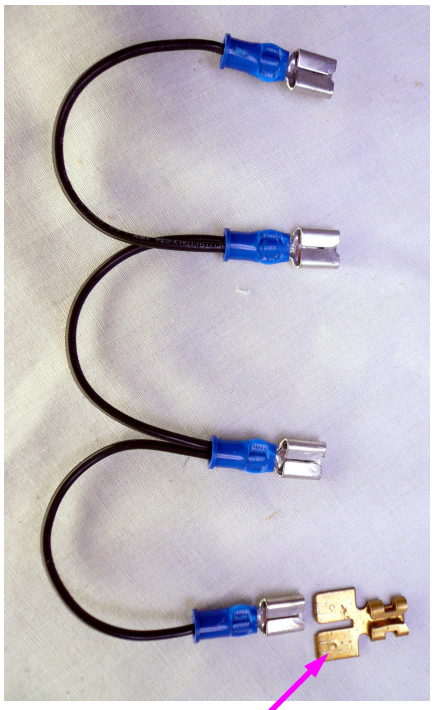

TERMINAL LINK

Installed Jumper Wire to Console Switches Image 7

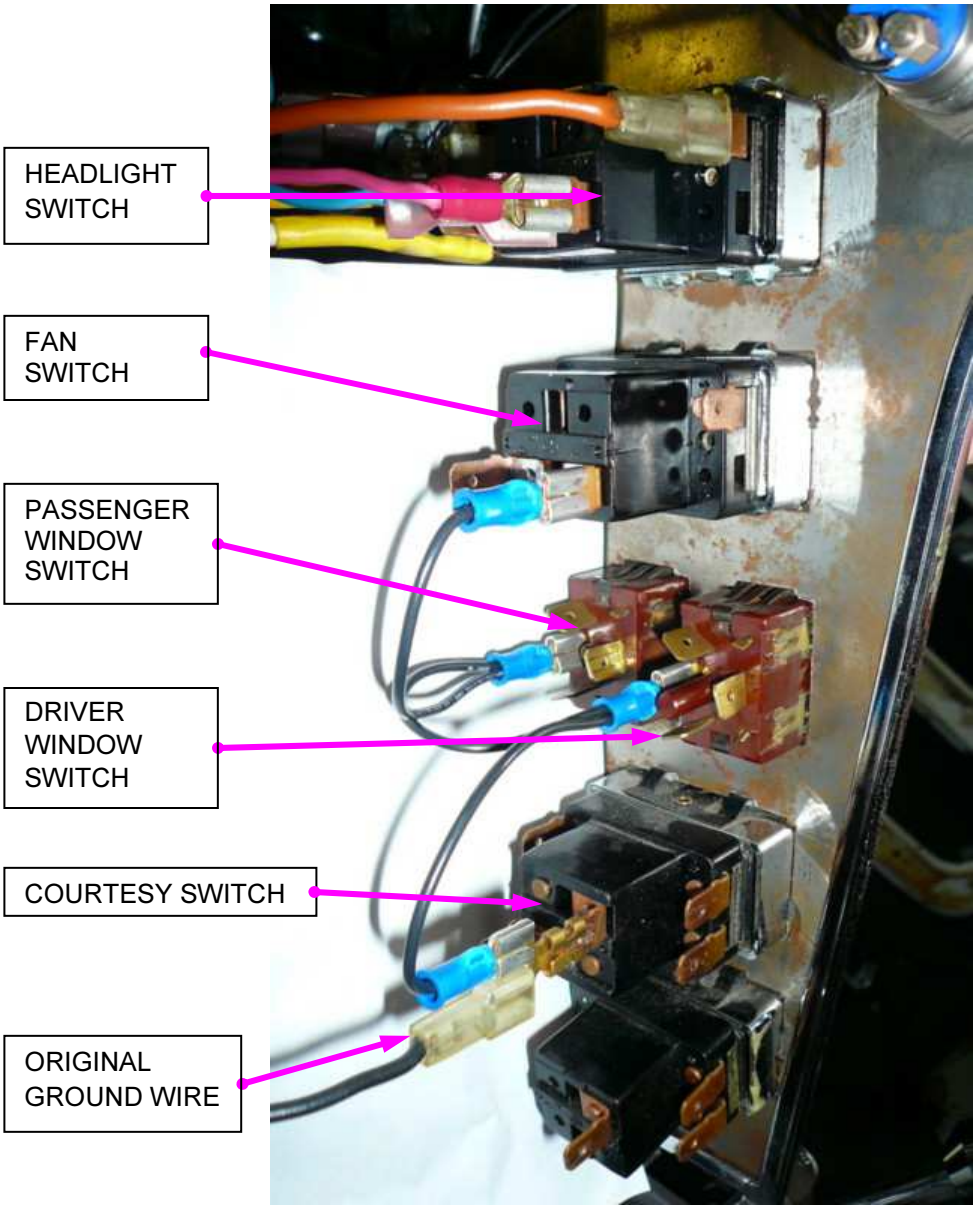

Constructed Harness Switch Connection Image 8

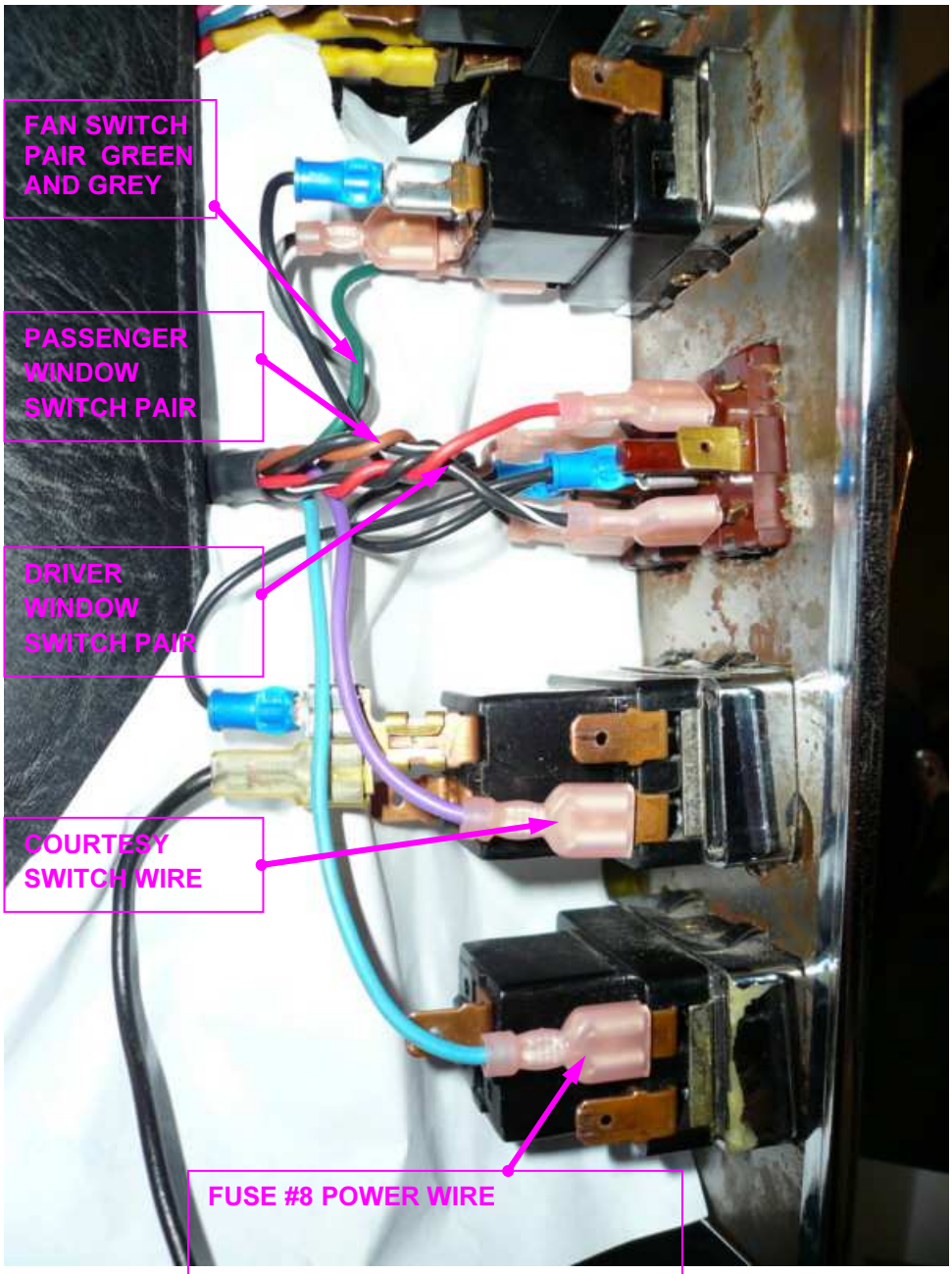

THIS INSTALLATION USES THE EXTRA SWITCH TO POWER THE AUDIO SYSTEM AND GPS.

Automatic Fan Speed Switch Connection Image 9

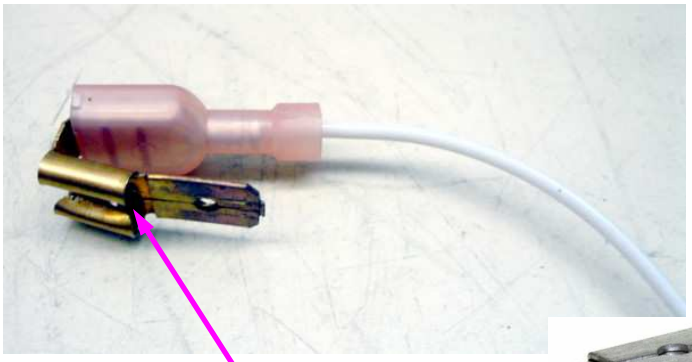

ADD TERMINAL LINK OR A PIGGY -BACK TERMINAL FOR AN ADDITIONAL CONNECTION.

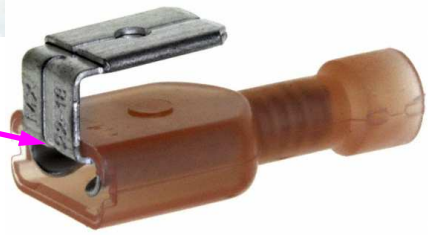

These pictures are from behind the dash looking at the back of the A/C switch.

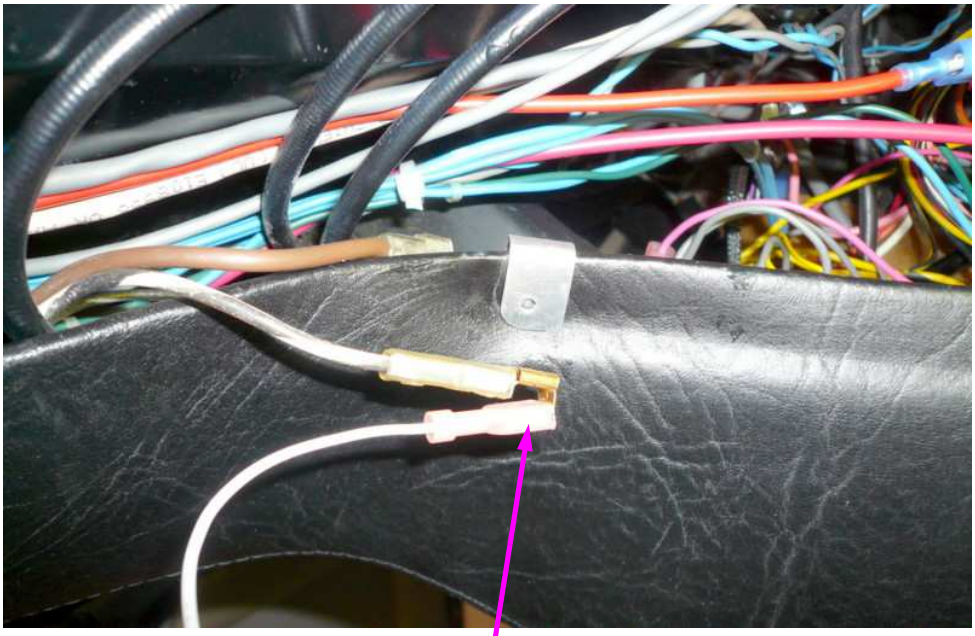

ADD WHITE WIRE TO WHITE/BLACK WIRE WITH LINK AND CONNECT TO A/C SWITCH

Automatic Fan Speed Switch Connection Image 10

This picture is from behind the dash looking at the back of the A/C switch.

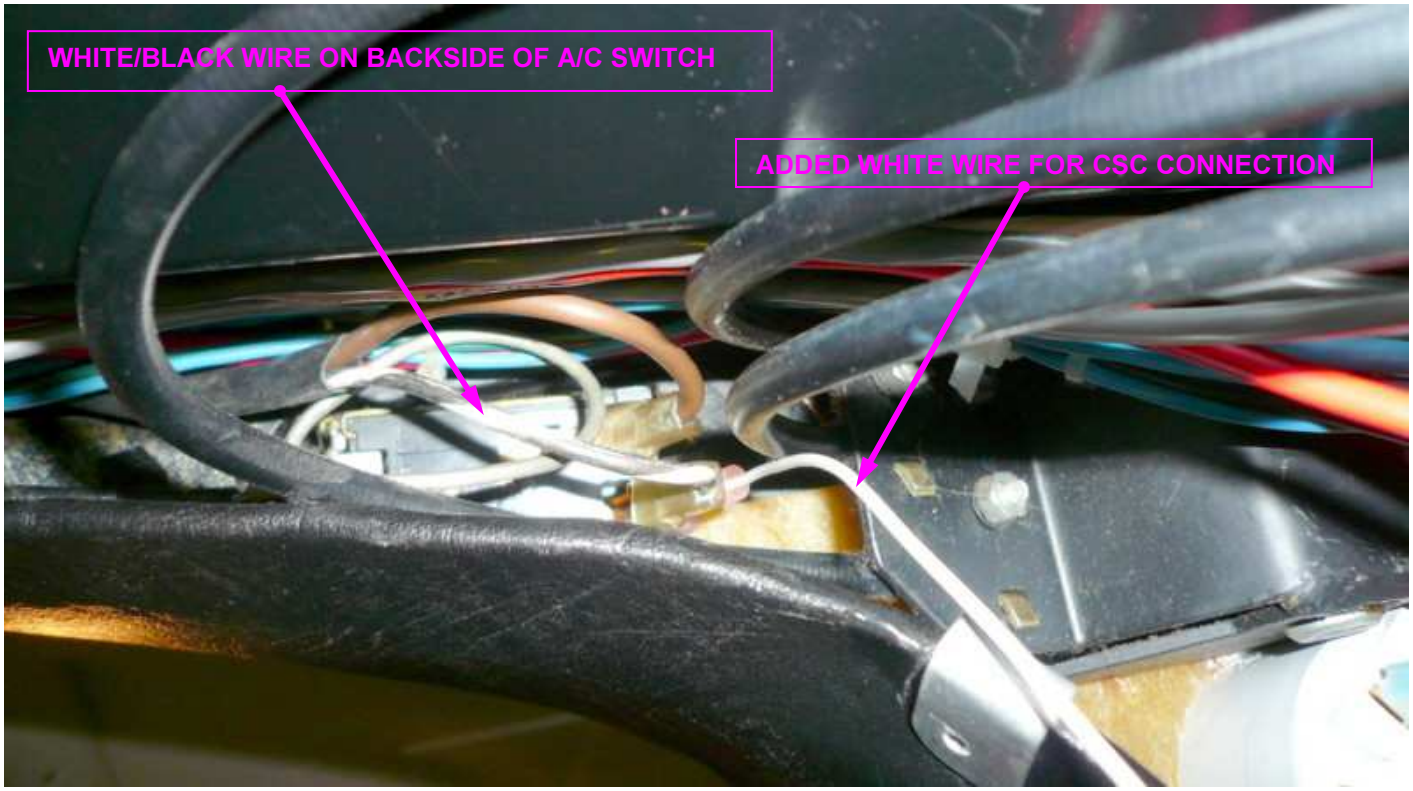

Sample of wired Console Switch Controller in position Image 11

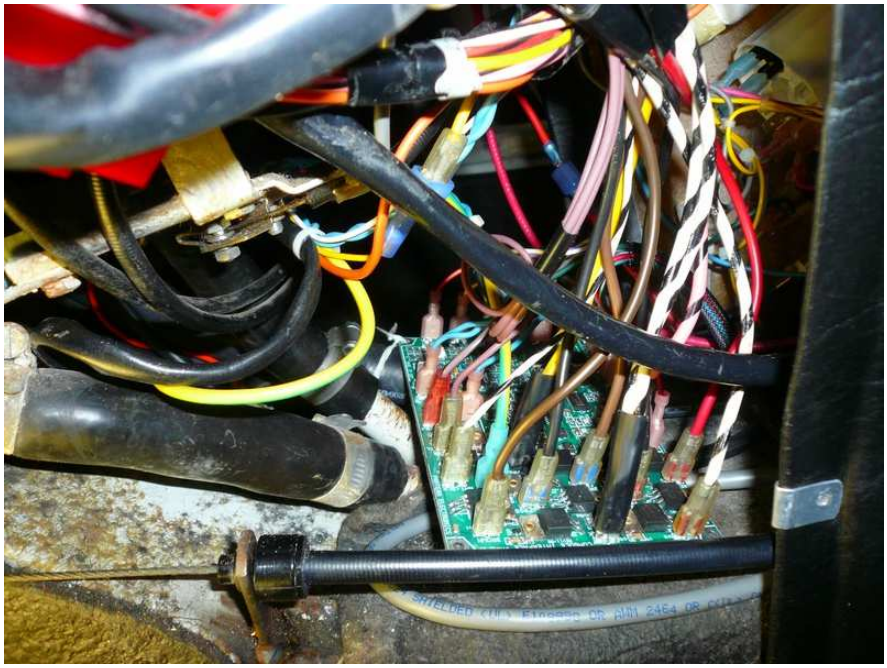

de Tomaso Window Switch Pin Out

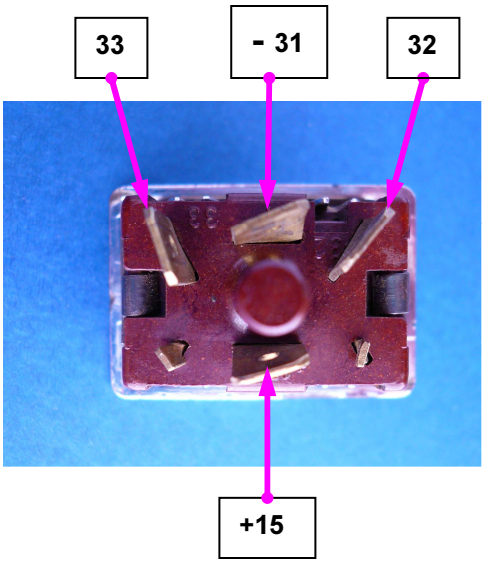

German Bosch Window Switch Pin Out

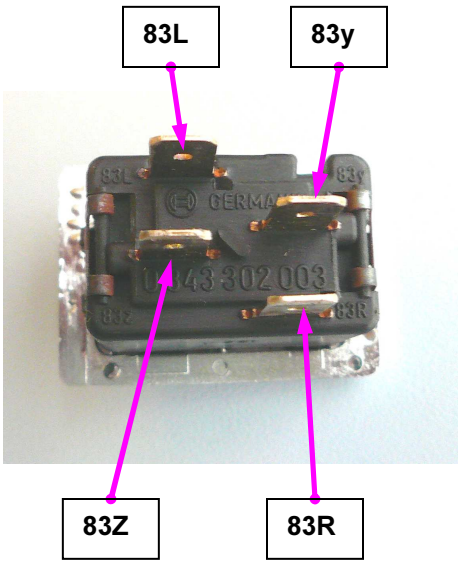

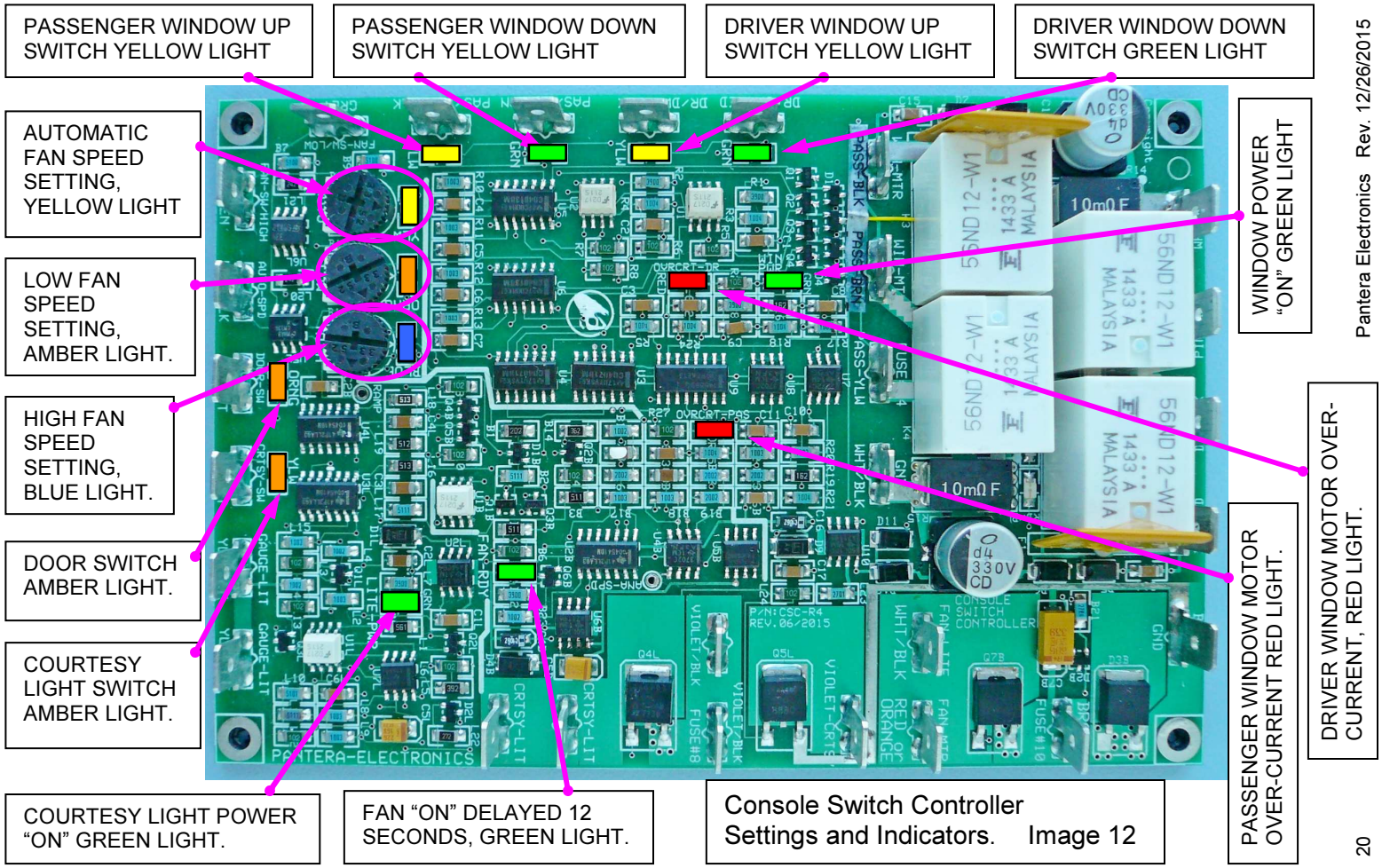

Console Switch Controller Settings and Indicators. Image 12

Console Switch Controller Map Image 13

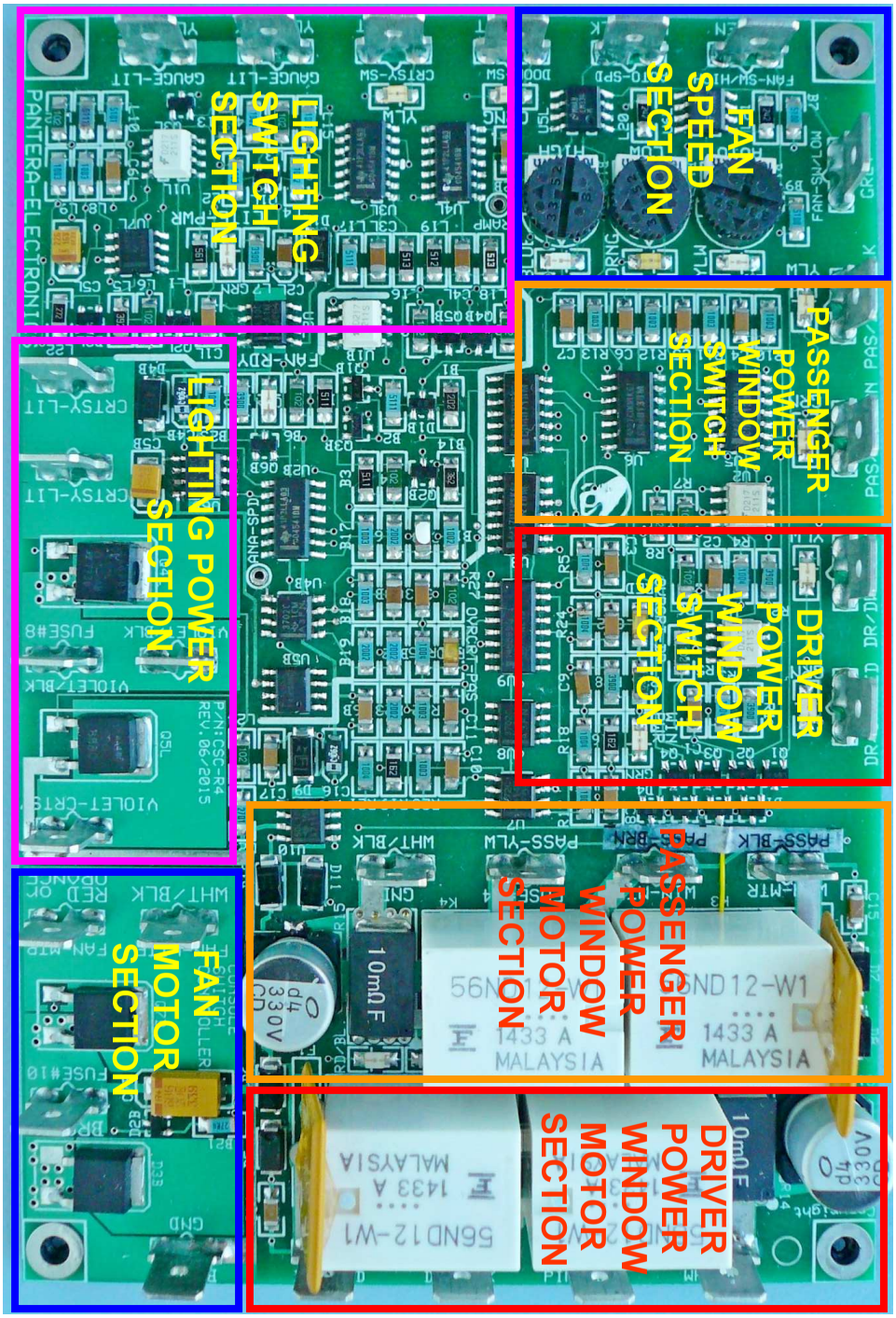

These are the bolts that mount the window regulator to the door frame, numbered 1 through 5.

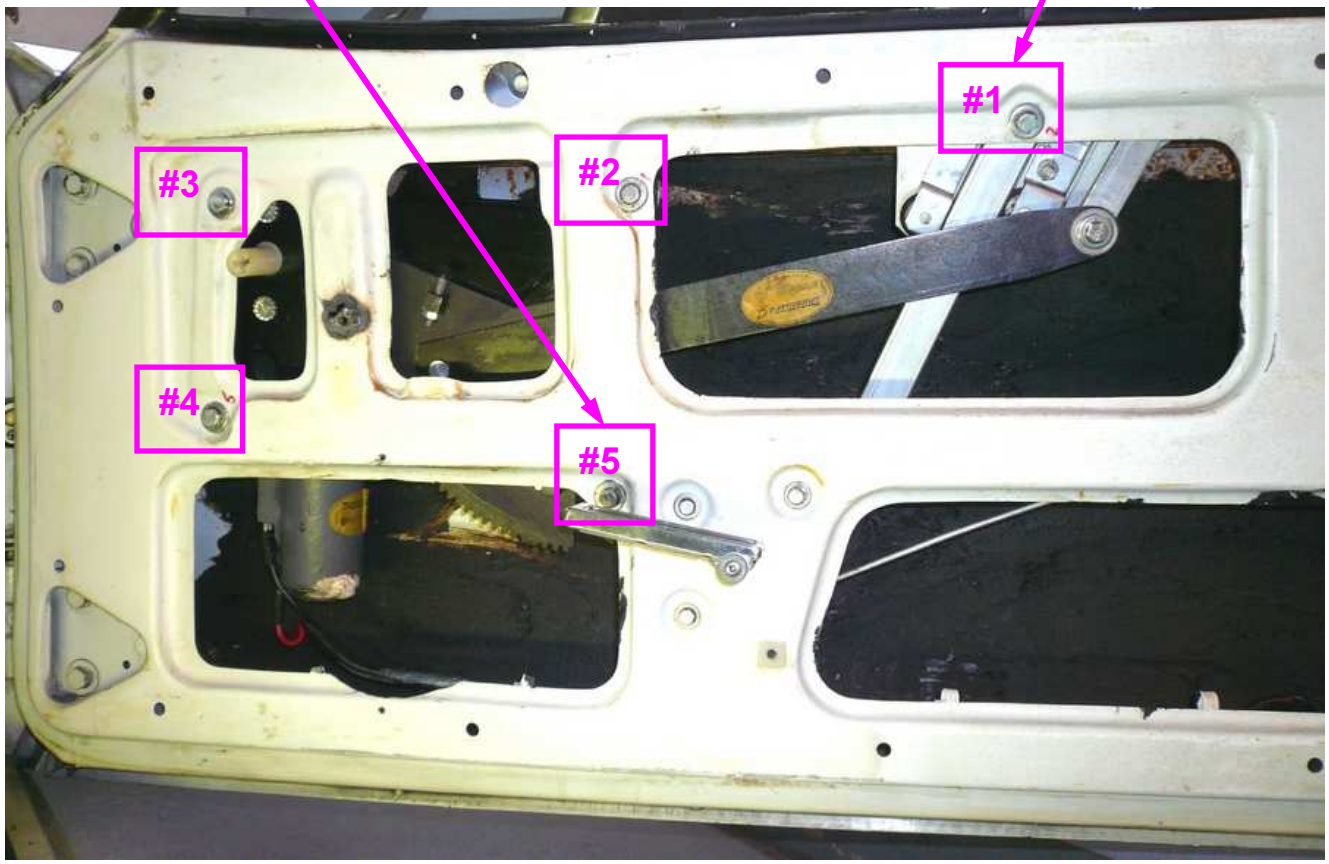

Window Mechanism Adjustment Image 15

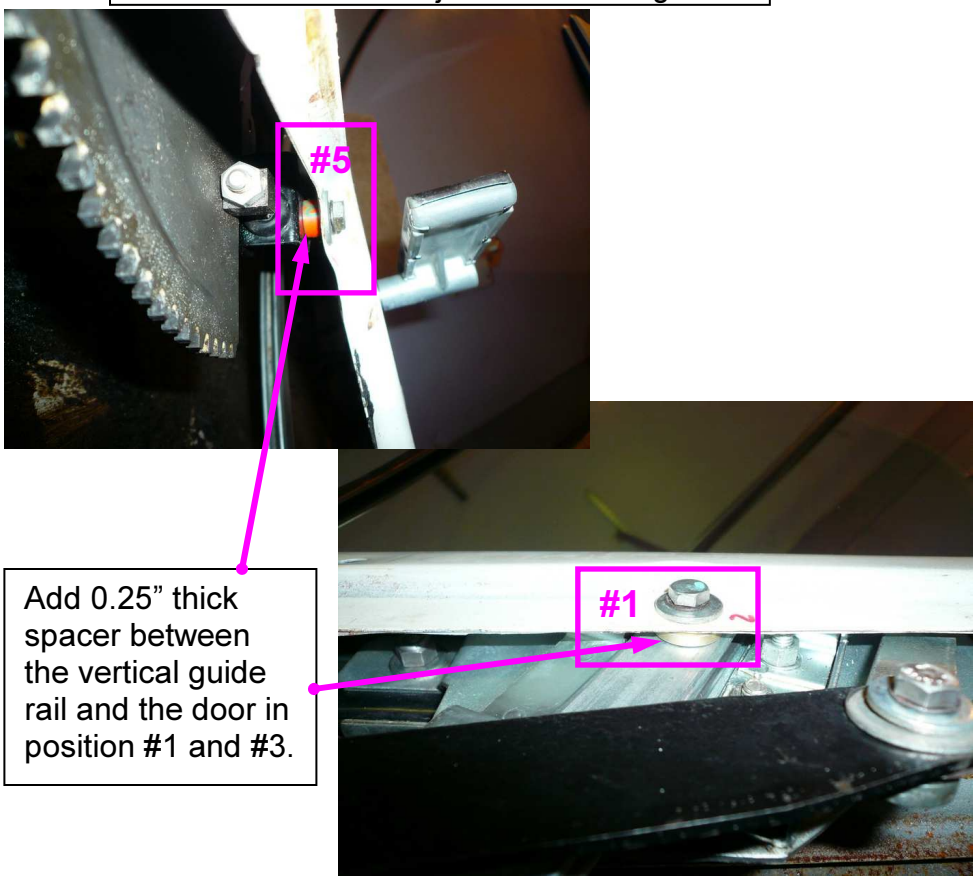

Add 0.25” thick spacer between the vertical guide rail and the door in position #1 and #3.

It’s ***absolutely critical*** to verify that the windows regulators operate with the least amount of resistance as the windows move throughout the full travel. The CSC senses motor current to stop the window as it hits the end stops. If the regulator has too much resistance to movement, the CSC will detect the high current and stop the window after the switch is activated.

The glass has a curvature that should match the frame of the door as close as possible. To reduce the resistance, spacers 0.25” thick were installed between the door sheet metal and the window regulator mechanisms. Bolts #1 and #3 have the spacers and the other bolt locations do not. This may vary from car to car but by experimentation you should be able to determine which locations work best for your doors.

After installing spacers test the speed of the window, the faster the operation, the lower the resistance. 6mm washers can be stacked to get the desired thickness as an option to using spacers.

Examples of wired Console Switch Controller Images 16

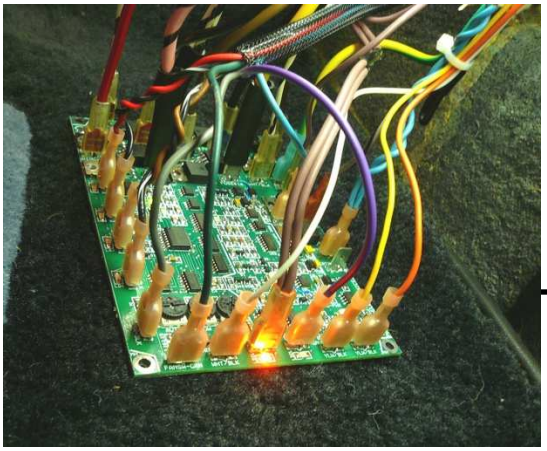

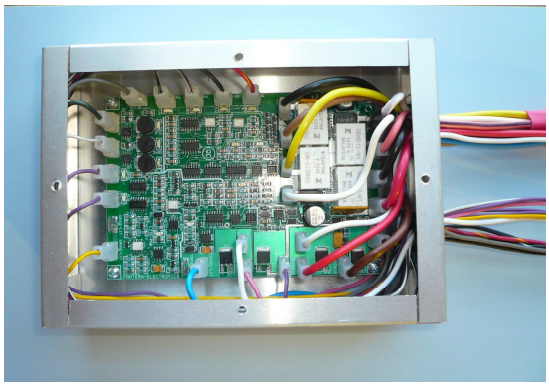

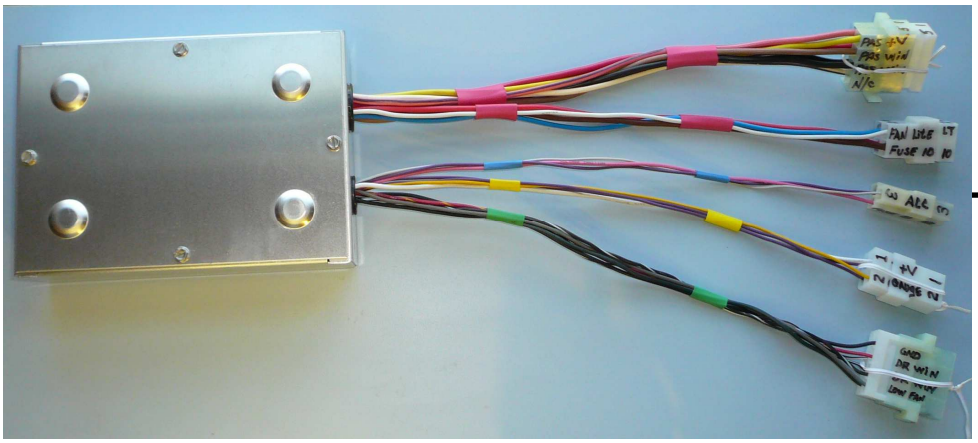

NOTE: It's important to keep this installation manual for future reference since revisions to this product change the contents of the installation manual.